Energy Manager dimensions and fixing points

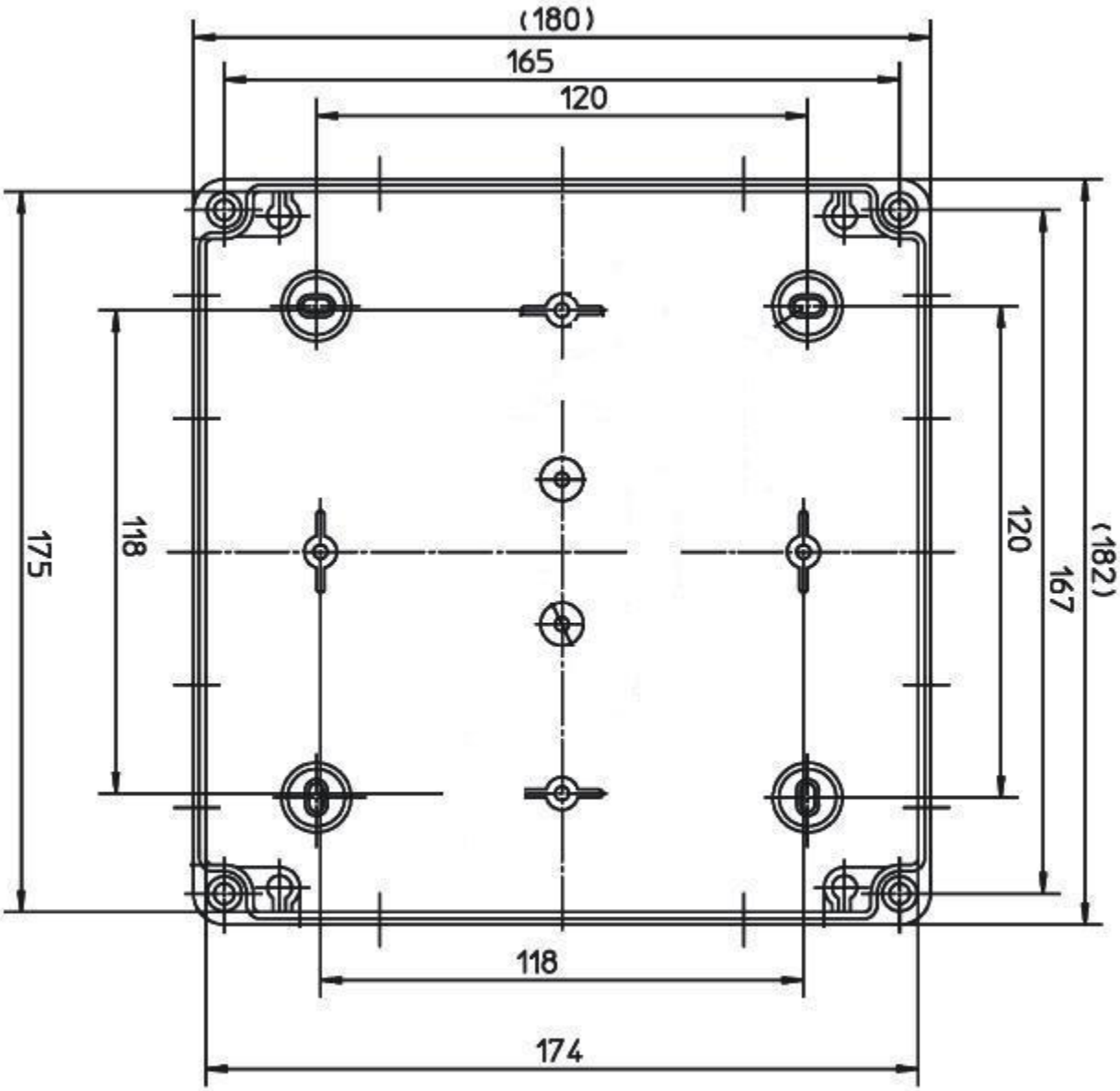

Note:

All dimensions are in mm
Unit height is 65mm
Use of corner fixing holes is recommended